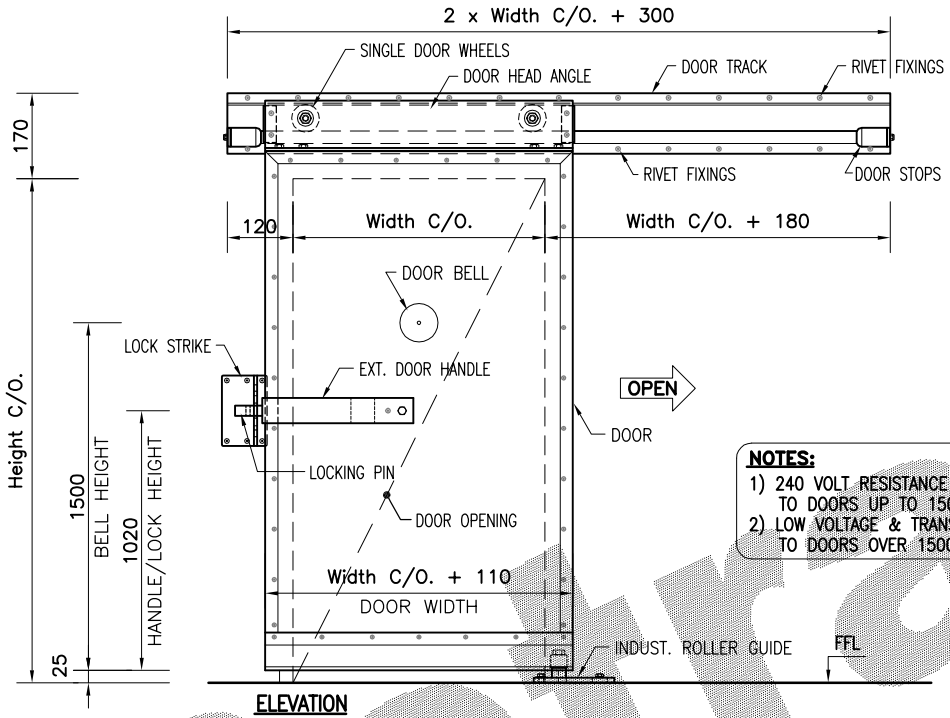

ELEVATION

NOTES:
1) 240 VOLT RESISTANCE HEATER CABLE TO DOORS UP TO 1500 WIDTH C/O.
2) LOW VOLTAGE & TRANSFORMER TO DOORS OVER 1500 WIDTH C/O.

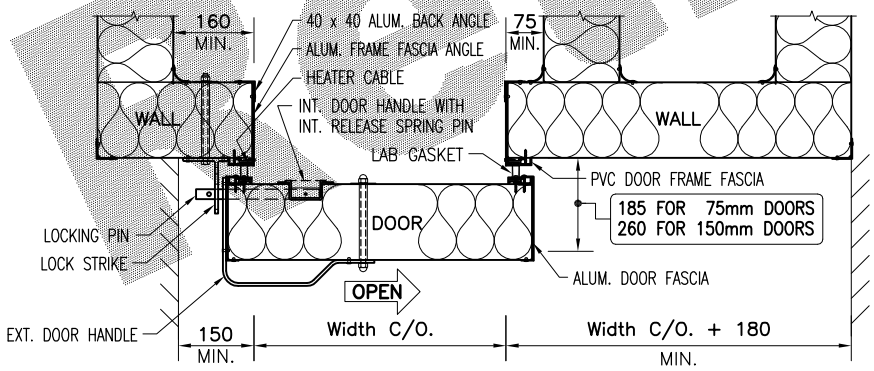

SECTIONAL PLAN VIEW
R.H. OPENING DOOR DRAWN (L.H. OPPOSITE)

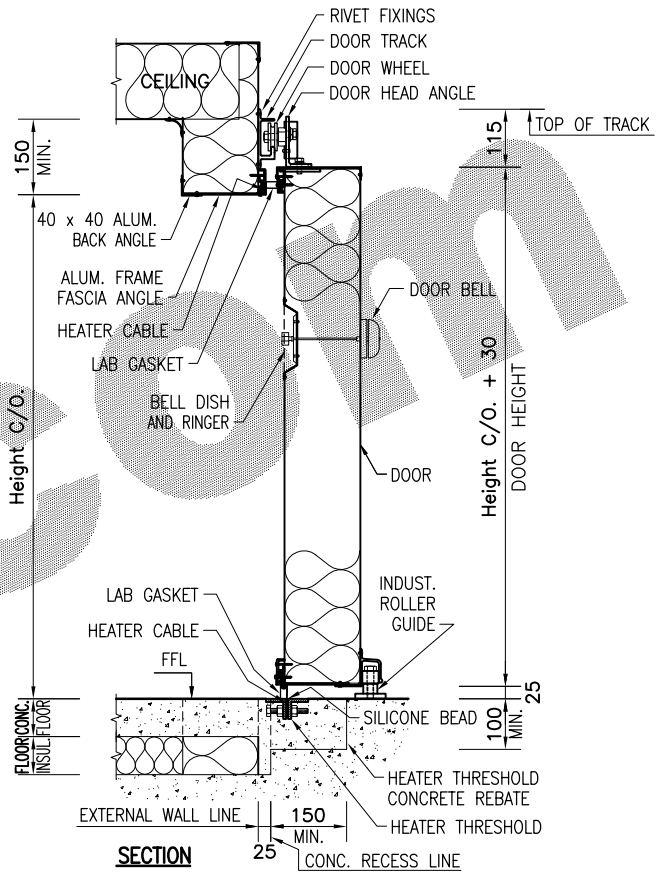

SECTION

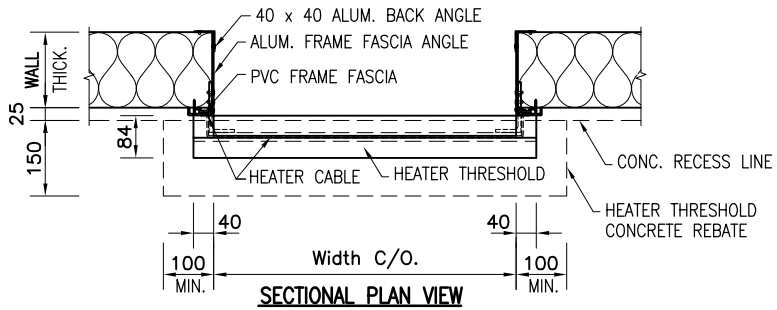

SECTIONAL PLAN VIEW

* NOTE: * DIMENSIONS ARE IN "mm" * DO NOT SCALE

Retracom *Manufacturing*
60 Magnesium Drive
Crestmead, QLD. 4132
Telephone: (07) 3803 4733
Facsimile: (07) 3803 4711
Email: sales@retracom.com.au

THIS DRAWING IS THE PROPERTY OF RETRACOM, AND IS RESTRICTED TO ITS OWN USE. THE WHOLE OR ANY PART THEREOF MAY NOT BE COPIED OR REPRODUCED OR LOANED IN ANY FORM WITHOUT THE WRITTEN AUTHORISATION OF THE COMPANY.

Title:	WIPER SILL SLIDE DOOR WITH HEATED FRAME ...	Date Drawn: MARCH 2008 By: J.B.	Job No.: ...
		Checked: ... By: ...	Dwg. No.: SDC-08-001-03 Revision: "C"
For:	SLIDE DOORS UP TO 1400 C/O. WIDE	Scale: N.T.S. Sheet A4	Sheet 1 of 1 FEB 2010