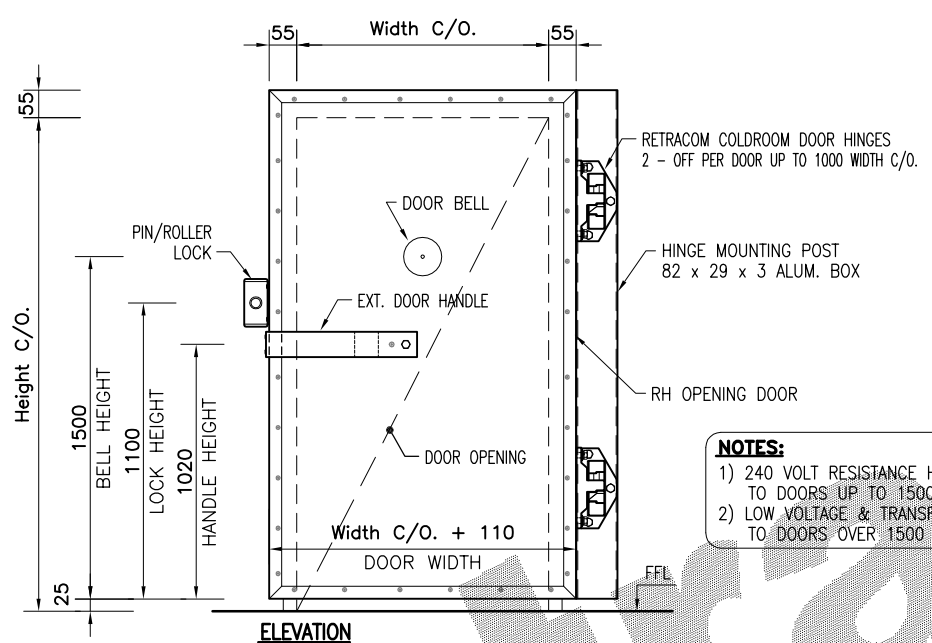

ELEVATION

NOTES:

1) 240 VOLT RESISTANCE HEATER CABLE TO DOORS UP TO 1500 WIDTH C/O.
2) LOW VOLTAGE & TRANSFORMER TO DOORS OVER 1500 WIDTH C/O.

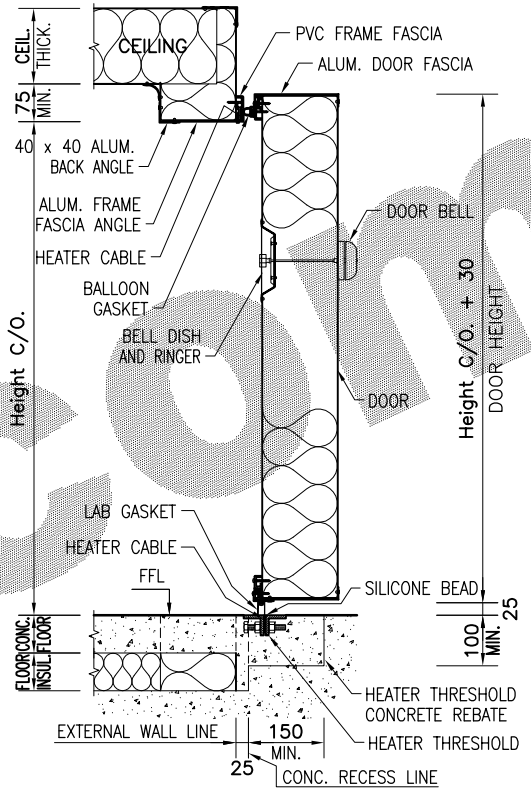

SECTION

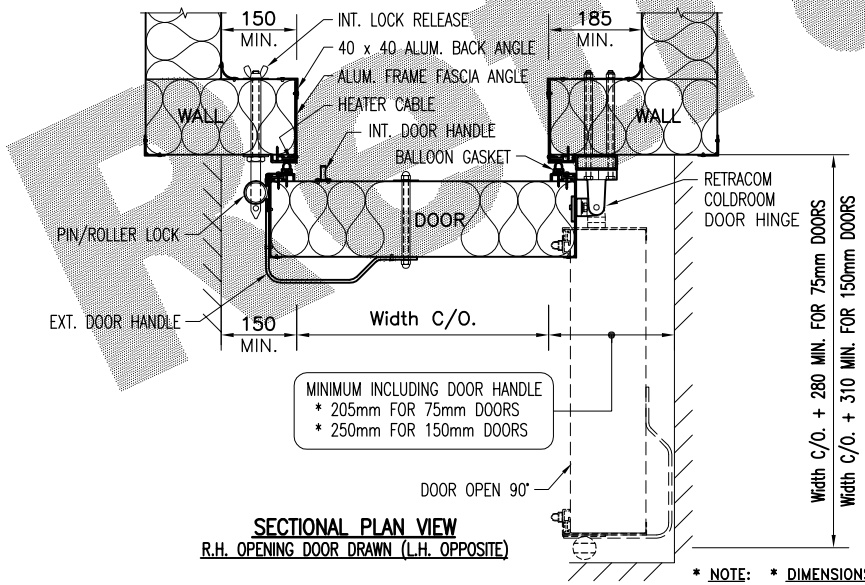

SECTIONAL PLAN VIEW
R.H. OPENING DOOR DRAWN (L.H. OPPOSITE)

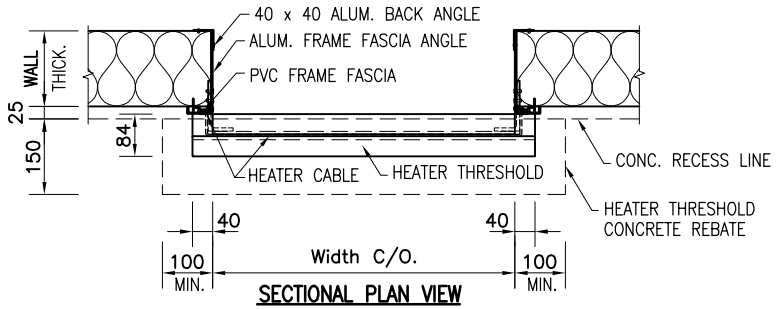

SECTIONAL PLAN VIEW

* NOTE: * DIMENSIONS ARE IN "mm" * DO NOT SCALE

Retracom

Retracom *Manufacturing*
60 Magnesium Drive
Crestmead, QLD. 4132
Telephone: (07) 3803 4733
Facsimile: (07) 3803 4711
Email: sales@retracom.com.au

THIS DRAWING IS THE PROPERTY OF RETRACOM, AND IS RESTRICTED TO ITS OWN USE. THE WHOLE OR ANY PART THEREOF MAY NOT BE COPIED OR REPRODUCED OR LOANED IN ANY FORM WITHOUT THE WRITTEN AUTHORISATION OF THE COMPANY.

Title: **WIPER SILL SWING DOOR WITH HEATED FRAME AND HINGE MOUNTING POST**	Date Drawn: OCT 2007	By: T.S.	Job No.: ...
	Checked: ...	By: ...	Dwg. No.: **SDC-06-001-02**
For: **SWING DOORS UP TO 1000 C/O. WIDE**	Scale: N.T.S. (15.5x4)	Sheet A4	Revision: "B"
			Sheet 1 of 1 — FEB 2010